SPICER®

DANA

J300P-9A
December 2008
Supersedes J300P-9A
Dated December 2006

Driveline Components Catalog
Center Bearings

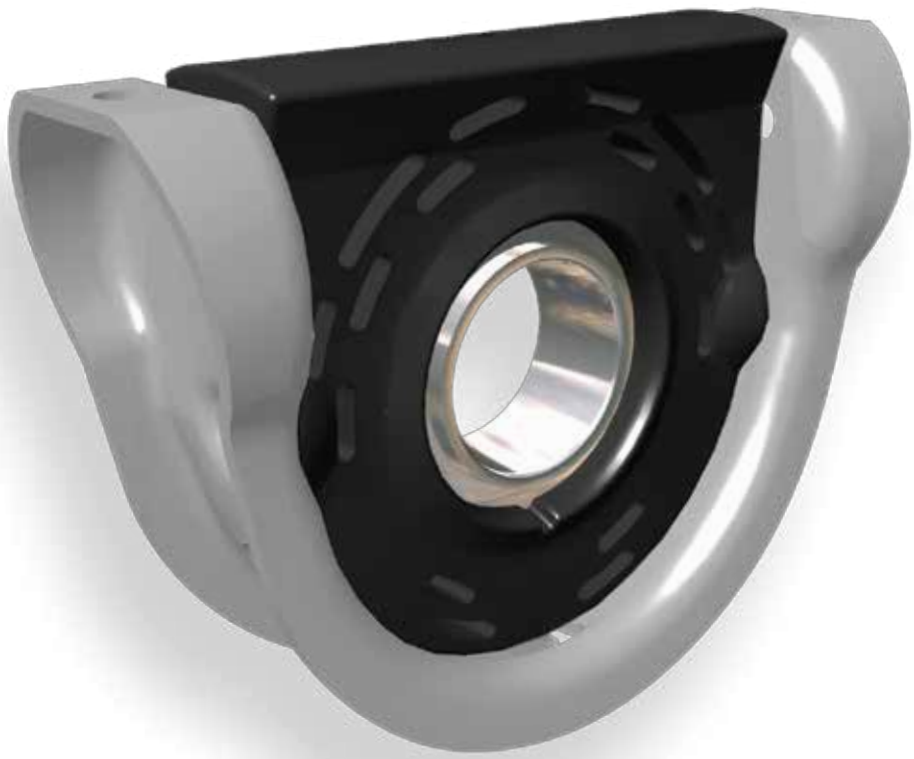

Updated 8-30-2013

- Page 17, Style 22, Column B: changed Center Bearing part number 212135-1x from 2.890 to 2.690

Product pictured is intended to be a representation of product category.

SPICER®
DRIVETRAIN COMPONENTS

NEW!

Spicer® XC™ Center Bearing

Improved Performance and Maintenance Free

The new Spicer XC™ self-aligning center bearing provides optimal alignment within plus (+) or minus (-) 10 degrees, which translates into improved performance and durability. The advanced technology elastomer material reduces noise and vibration, while the innovative design maintains the proper driveline angle to maximize driveshaft and component life.

This best-in-class center bearing assembly also includes a maintenance-free, double-lip sealed bearing to reduce contamination, eliminate the need for a dust shield, and provide longer life.

The Spicer® XC Center Bearing Advantage

- **Weighs 1.3 pounds less than current Spicer designs**
- **Self aligning**

www.spicerparts.com

Center Bearings by Bearing I.D.

Bearing I.D.	Style	Found on Page #	Center Bearing Assy Part Number	Center to Center of Mounting Holes	Bracket Width	Bearing I.D.	Style	Found on Page #	Center Bearing Assy Part Number	Center to Center of Mounting Holes	Bracket Width
0.750	1	4	210330-1X	~	~	1.574	15	12	211260X	6.620	1.226
0.875	1	4	210330-2X•	~	~	1.574	15	12	211359X	6.620	1.226
1.000	1	4	210330-4X	~	~	1.574	15	12	211735-3X	6.620	1.226
1.181	3	5	211406X	~	~	1.574	15	12	211793-1X	6.620	1.226
1.181	3	5	211514X	~	~	1.574	17	13	212028-1X	6.620	1.226
1.181	4	6	211502X	~	~	1.574	18	14	212032-1X	6.620	1.226
1.181	10	9	210527X	1.500	.630	1.574	19	15	212030-1X	6.620	1.226
1.181	2	5	212187-1X	3.700	1.181	1.574	19	15	212031X	6.620	1.226
1.181	5	6	211589-1X	3.700	~	1.574	19	15	212031-1X	6.620	1.226
1.181	9	8	212244-1X	3.937	~	1.574	20	16	210140-1X	6.620	2.000
1.181	7	7	211872-1X	5.880	1.390	1.574	20	16	210144-1X	6.620	2.000
1.181	11	9	211590-1X	5.880	1.450	1.574	20	16	210391-1X	6.620	2.000
1.181	12	10	5002007	5.906	2.244	1.574	20	16	210433-1X	6.620	2.000
1.181	6	7	211750-1X	5.910	~	1.574	20	16	211037-1X	6.620	2.000
1.181	8	8	212165-1X	6.890	2.268	1.574	20	16	211098-1X	6.620	2.000
1.181	8	8	212166-1X•	6.890	2.268	1.574	28	20	212144-1X	6.620	1.520
1.181	8	8	5009385	6.890	2.268	1.574	27	20	5009792	6.622	.992
1.250	1	4	210330-6X	~	~	1.574	19	15	212258-1X	6.700	1.226
1.259	12	10	211571X	5.880	1.420	1.750	21	17	211304X•	~	~
1.260	11	9	211431X	5.880	1.450	1.771	20	16	210084-2X	7.620	2.250
1.375	14	11	5001874	6.625	~	1.771	20	16	210207-1X	7.620	2.250
1.378	11	9	211175X	6.620	1.726	1.771	20	16	211172-1X	7.620	2.250
1.378	11	9	211819-1X•	6.620	1.726	1.771	23	18	212145-1X	7.620	2.250
1.378	13	10	211985X•	6.620	1.226	1.771	19	15	212134-1X	7.622	2.250
1.378	15	12	210088-1X	6.620	1.226	1.771	22	17	212135-1X	7.622	2.250
1.378	15	12	210090-1X	6.620	1.226	1.771	22	17	212261-1X	7.622	2.250
1.378	15	12	211212X	6.620	1.226	1.968	20	16	210121-1X	7.620	2.250
1.378	15	12	210367-1X	6.620	1.226	1.968	20	16	210881-1X	7.620	2.250
1.378	15	12	210370-1X	6.620	1.226	1.968	20	16	211625-1X	7.620	2.250
1.378	15	12	211415X	6.620	1.226	1.968	22	17	212142-1X	7.620	2.250
1.378	14	11	212088-1X•	6.625	~	1.968	23	18	212153-1X	7.620	2.250
1.574	15	12	5008025	3.380	1.226	1.968	24	18	212156-1X	7.620	2.250
1.574	16	13	211848-1X	3.380	1.742	2.362	26	19	210661-1X	8.620	2.530
1.574	16	13	211963-1X	3.380	1.742	2.362	26	19	210875-1X	8.620	2.530
1.574	11	9	211499X	6.620	1.726	2.362	26	19	210989-1X	8.620	2.530
1.574	11	9	211748-3X•	6.620	1.726	2.362	26	19	212066-1X	8.620	2.530
1.574	11	9	212053-1X	6.620	1.726	2.362	25	19	5003323	8.622	2.917
1.574	13	10	5003684	6.620	1.226	2.362	25	19	5003326	8.622	2.917
1.574	15	12	210866-1X	6.620	1.226	2.362	25	19	5003628	8.622	2.917
1.574	15	12	210873-1X	6.620	1.226						

* Part has been discontinued; offered until supply is exhausted

Center Bearing Detail

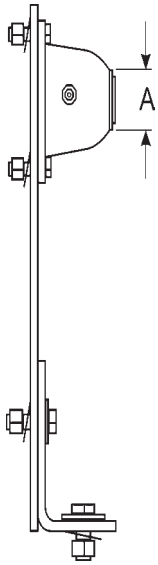

Style 1

Center Bearing Assy Part Number	B Centerline To Mounting Surface	C Bracket Width	Parts not sold separately — Shown for informational purposes only: Center Bearing Major Parts: Bracket Part Number	Rubber Cushion Part Nbr.	Bearing & Retainer Assy.	Front Slinger Part Number	Rear Slinger Part Number	Retainers: Bottom	Top
A = 0.750 Bearing I.D.									
210330-1X	Max 8"	~	230512 230513	~	230514-1	~	~	~	~
			PTO adjustable bearing hanger, variable centerline to mounting surface, Max. 8"						
A = 0.875 Bearing I.D.									
210330-2X•	Max 8"	~	230512 230513	~	230514-2	~	~	~	~
			PTO adjustable bearing hanger, variable centerline to mounting surface, Max. 8"						
A = 1.000 Bearing I.D.									
210330-4X	Max 8"	~	230512 230513	~	230514-4	~	~	~	~
			PTO adjustable bearing hanger, variable centerline to mounting surface, Max. 8"						
A = 1.250 Bearing I.D.									
210330-6X	Max 8"	~	230512 230513	~	230514-6	~	~	~	~
			PTO adjustable bearing hanger, variable centerline to mounting surface, Max. 8"						

• Part is discontinued ■ Part is available until supply is exhausted ⅄ Not sold separately

Important: See Safety Information in General Information Section (J300P-GI)

Center Bearing Detail

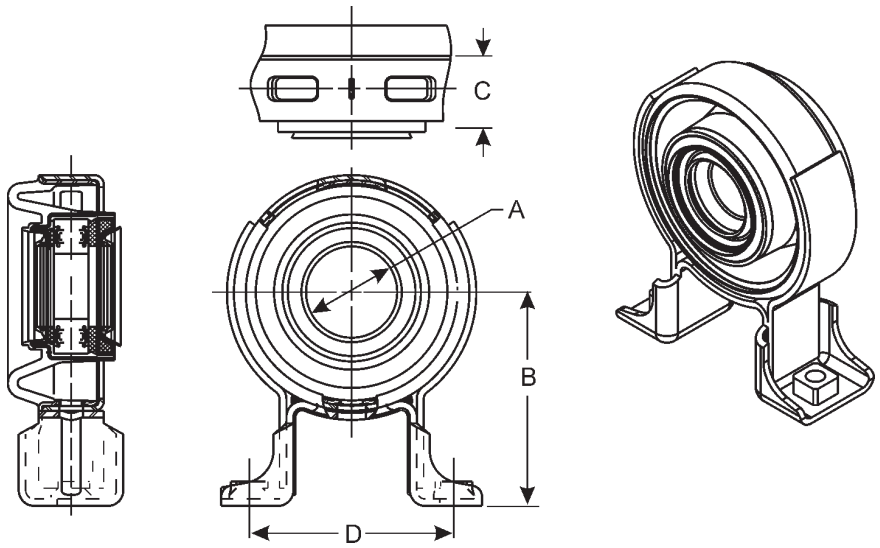

Style 2

Center Bearing Assy Part Number	B Centerline To Mounting Surface	C Bracket Width	Parts not sold separately — Shown for informational purposes only: Center Bearing Major Parts: Bracket Part Number	Rubber Cushion Part Nbr.	Bearing & Retainer Assy.	Front Slinger Part Number	Rear Slinger Part Number	Retainers: Bottom	Top
A = 1.181 Bearing I.D. D = 3.700 Bolt Hole/Stud Size = M12 X 1.75TH (nut)									
212187-1X	3.976	1.181	~	~	~	~	~	~	~

(2) nuts attached to bracket

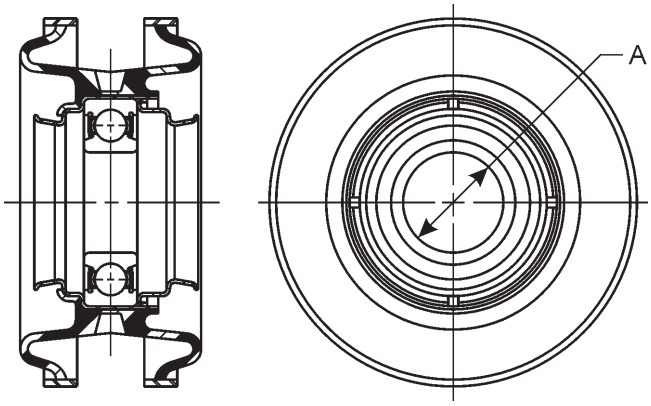

Style 3

Center Bearing Assy Part Number	B Centerline To Mounting Surface	C Bracket Width	Parts not sold separately — Shown for informational purposes only: Center Bearing Major Parts: Bracket Part Number	Rubber Cushion Part Nbr.	Bearing & Retainer Assy.	Front Slinger Part Number	Rear Slinger Part Number	Retainers: Bottom	Top
A = 1.181 Bearing I.D.									
211406X	~	~	~	231653	580914-2	231563	~	~	~
211406X was replaced by 211514X									
211514X	~	~	~	231653	580914-2	231563	~	~	~
Has the 211406X included, with washer 230123-12 and nut 231781									

• Part is discontinued ■ Part is available until supply is exhausted ⅄ Not sold separately

Important: See Safety Information in General Information Section (J300P-GI)

Center Bearing Detail

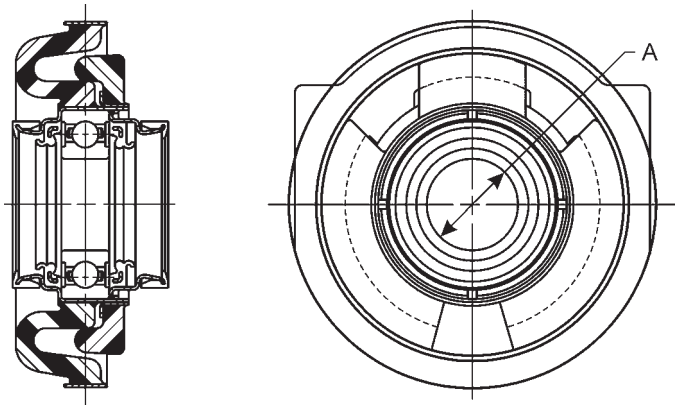

Style 4

Center Bearing Assy Part Number	B Centerline To Mounting Surface	C Bracket Width	Parts not sold separately — Shown for informational purposes only: Center Bearing Major Parts: Bracket Part Number	Rubber Cushion Part Nbr.	Bearing & Retainer Assy.	Front Slinger Part Number	Rear Slinger Part Number	Retainers: Bottom	Top
A = 1.181 Bearing I.D.									
211502X	~	~	~	231855	580914-3	~	231563	~	~

No bracket, Dust Cap 231811

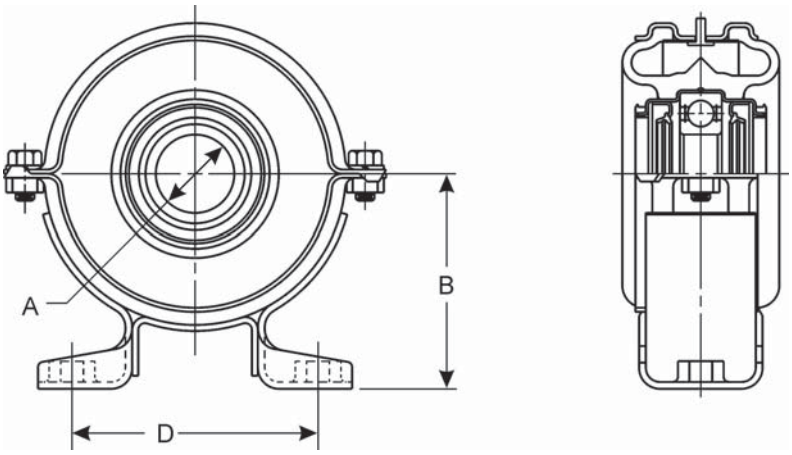

Style 5

Center Bearing Assy Part Number	B Centerline To Mounting Surface	C Bracket Width	Parts not sold separately — Shown for informational purposes only: Center Bearing Major Parts: Bracket Part Number	Rubber Cushion Part Nbr.	Bearing & Retainer Assy.	Front Slinger Part Number	Rear Slinger Part Number	Retainers: Bottom	Top
A = 1.181 Bearing I.D. D = 3.700 Threaded Hole									
211589-1X	3.230	~	~	~	~	~	~	~	~

(2) nuts attached to bracket

• Part is discontinued ■ Part is available until supply is exhausted ⅄ Not sold separately

Important: See Safety Information in General Information Section (J300P-GI)

Center Bearing Detail

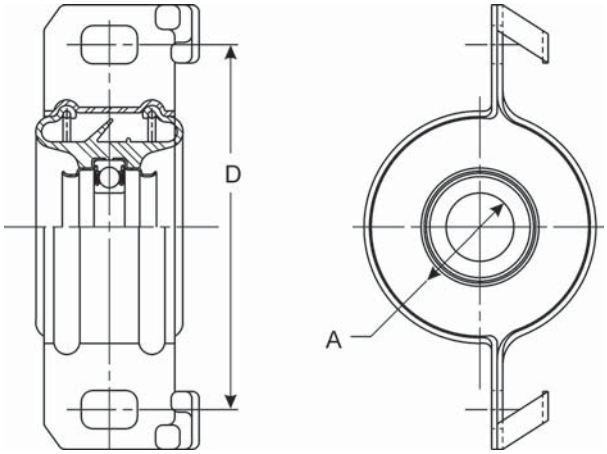

Style 6

Center Bearing Assy Part Number	B Centerline To Mounting Surface	C Bracket Width	Parts not sold separately — Shown for informational purposes only: Center Bearing Major Parts: Bracket Part Number	Rubber Cushion Part Nbr.	Bearing & Retainer Assy.	Front Slinger Part Number	Rear Slinger Part Number	Retainers: Bottom	Top
A = 1.181 Bearing I.D. D = 5.910									
211750-1X	~	~	~	~	~	~	~	~	~

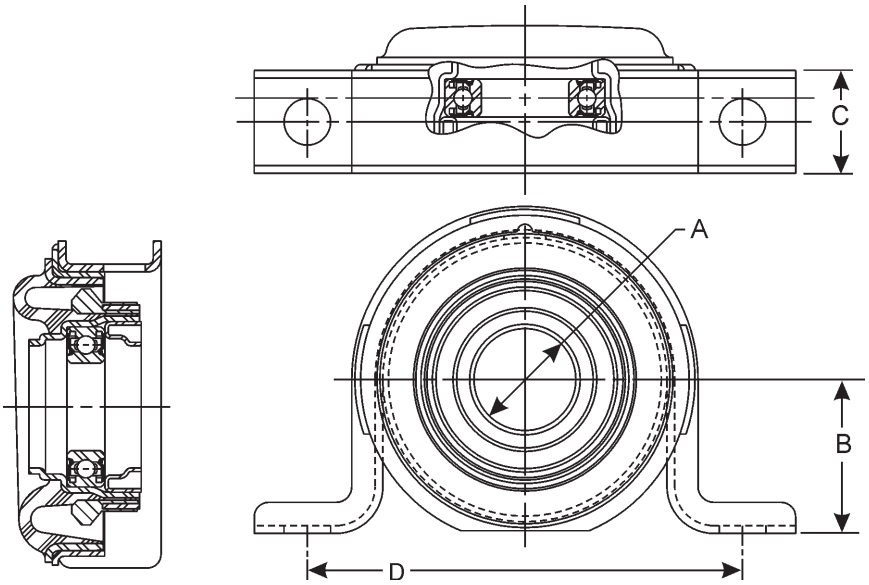

Style 7

Center Bearing Assy Part Number	B Centerline To Mounting Surface	C Bracket Width	Parts not sold separately — Shown for informational purposes only: Center Bearing Major Parts: Bracket Part Number	Rubber Cushion Part Nbr.	Bearing & Retainer Assy.	Front Slinger Part Number	Rear Slinger Part Number	Retainers: Bottom	Top
A = 1.181 Bearing I.D. D = 5.880 Bolt Hole/Stud Size = .630 (H)									
211872-1X	2.080	1.390	211976X	211983X	580921	~	~	~	~
								232520 retainer lock	

• Part is discontinued ■ Part is available until supply is exhausted ⅄ Not sold separately

Important: See Safety Information in General Information Section (J300P-GI)

Center Bearing Detail

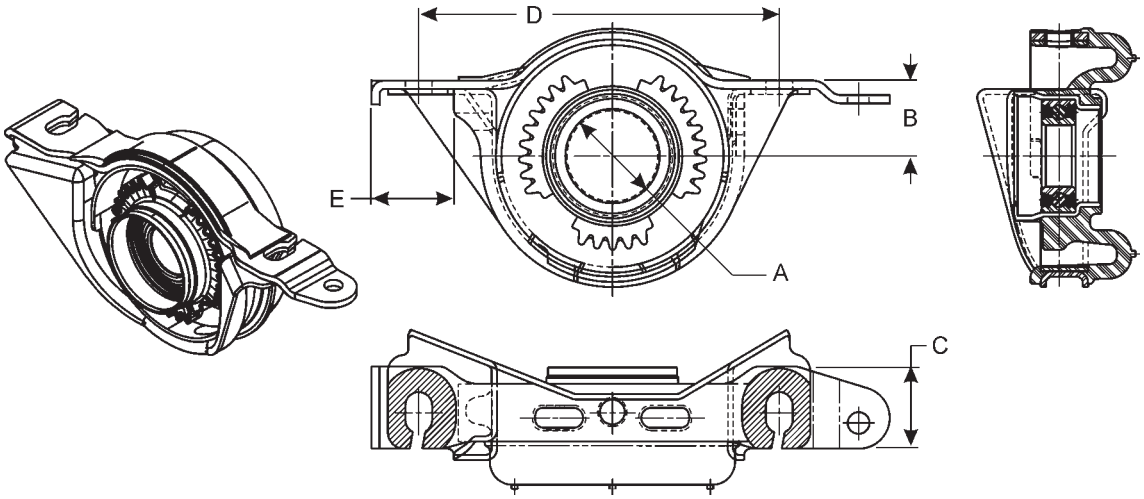

Style 8

Center Bearing Assy Part Number	B Centerline To Mounting Surface	C Bracket Width	Parts not sold separately — Shown for informational purposes only: Center Bearing Major Parts: Bracket Part Number	Rubber Cushion Part Nbr.	Bearing & Retainer Assy.	Front Slinger Part Number	Rear Slinger Part Number	Retainers: Bottom	Top
A = 1.181 Bearing I.D.		**D = 6.890**	**Bolt Hole/Stud Size = .787 X .512 (H)**						
212165-1X	1.440	2.268	~	212163X	580931	~	~	~	~
			E = 2.087; 212165-1X will be replaced by 5009385 when supply is exhausted						
212166-1X•	1.440	2.268	~	212164X	580931	~	~	~	~
									E = 1.693
5009385	1.440	2.268	~	5009383	580931	~	~	~	~
									E = 2.087

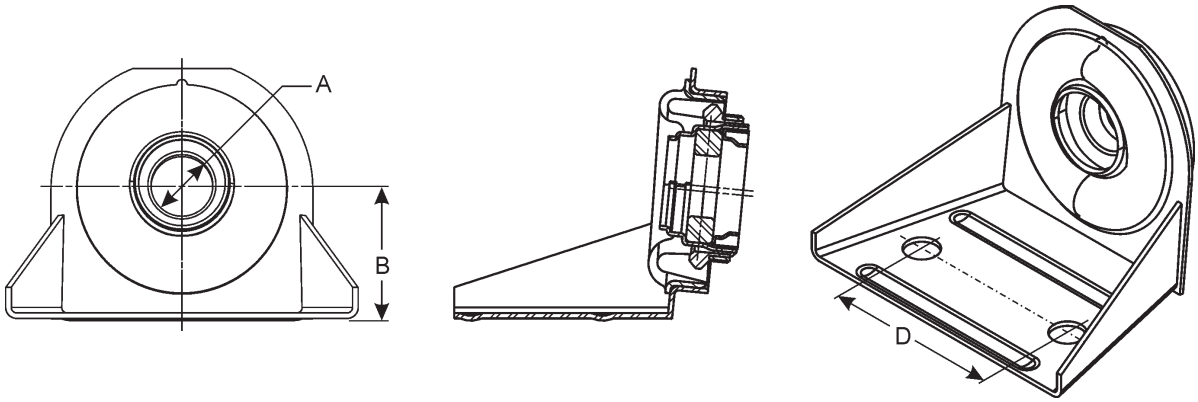

Style 9

Center Bearing Assy Part Number	B Centerline To Mounting Surface	C Bracket Width	Parts not sold separately — Shown for informational purposes only: Center Bearing Major Parts: Bracket Part Number	Rubber Cushion Part Nbr.	Bearing & Retainer Assy.	Front Slinger Part Number	Rear Slinger Part Number	Retainers: Bottom	Top
A = 1.181 Bearing I.D.		**D = 3.937**	**Bolt Hole/Stud Size = .750 (H)**						
212244-1X	2.480	~	233031	211983X	580921-1	~	~	232520	~

• Part is discontinued ■ Part is available until supply is exhausted ⅄ Not sold separately

Important: See Safety Information in General Information Section (J300P-GI)

Center Bearing Detail

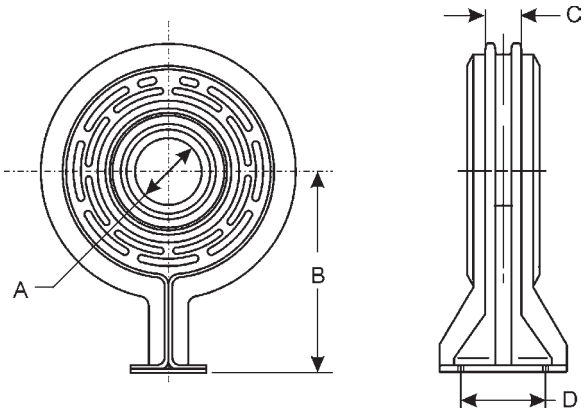

Style 10

Center Bearing Assy Part Number	B Centerline To Mounting Surface	C Bracket Width	Center Bearing Major Parts: Bracket Part Number	Rubber Cushion Part Nbr.	Bearing & Retainer Assy.	Front Slinger Part Number	Rear Slinger Part Number	Retainers: Bottom	Top
Parts not sold separately — Shown for informational purposes only									
A = 1.181 Bearing I.D. D = 1.500 (2) Threaded Holes									
210527X	3.560	.630	210580X	550735	230318	~	~	~	~

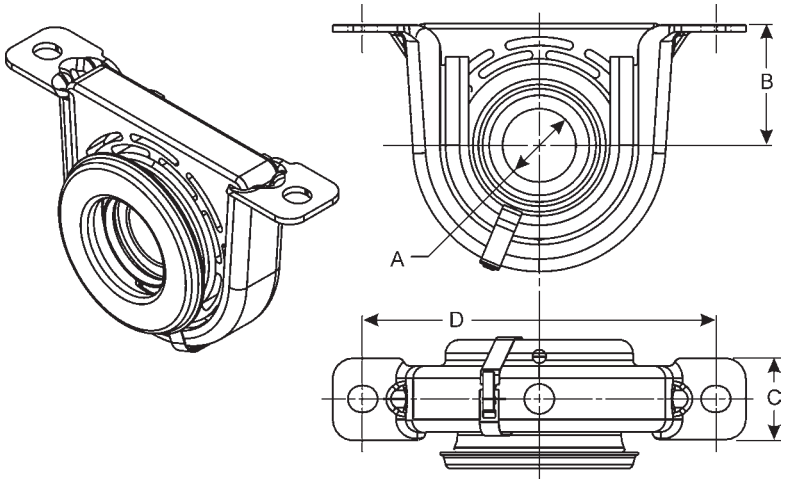

Style 11

Center Bearing Assy Part Number	B Centerline To Mounting Surface	C Bracket Width	Center Bearing Major Parts: Bracket Part Number	Rubber Cushion Part Nbr.	Bearing & Retainer Assy.	Front Slinger Part Number	Rear Slinger Part Number	Retainers: Bottom	Top
Parts not sold separately — Shown for informational purposes only									
A = 1.181 Bearing I.D. D = 5.880 Bolt Hole/Stud Size = .630 (H)									
211590-1X	1.940	1.450	5007512	231695	211554X	231696	~	3-95-139	~
A = 1.260 Bearing I.D. D = 5.880 Bolt Hole/Stud Size = .630 (H)									
211431X	1.940	1.450	231694	231695	211409-1X	231696	~	3-95-139	~
A = 1.378 Bearing I.D. D = 6.620 Bolt Hole/Stud Size = .560 (H)									
211175X	2.250	1.726	231285	231212	210086X	231286	231256	3-95-99	~
211819-1X•	2.250	1.726	231285	232181	210086-3X	231286	231256	3-95-99	~
A = 1.574 Bearing I.D. D = 6.620 Bolt Hole/Stud Size = .560 (H)									
211499X	2.250	1.726	231285	231212	210865-1X	231286	231834	3-95-99	~
211748-3X•	2.250	1.726	231285	232181	210865-1X	231286	231834	3-95-99	~
212053-1X	2.250	1.726	231285	231212	210865-1X	231286	~	3-95-99	~

• Part is discontinued ■ Part is available until supply is exhausted ⅄ Not sold separately

Important: See Safety Information in General Information Section (J300P-GI)

Center Bearing Detail

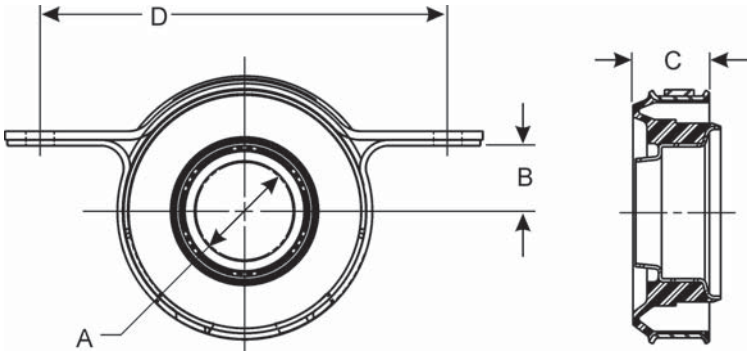

Style 12

Center Bearing Assy Part Number	B Centerline To Mounting Surface	C Bracket Width	Center Bearing Major Parts: Bracket Part Number	Rubber Cushion Part Nbr.	Bearing & Retainer Assy.	Front Slinger Part Number	Rear Slinger Part Number	Retainers: Bottom	Top
Parts not sold separately — Shown for informational purposes only									
A = 1.181 Bearing I.D. D = 5.906 Bolt Hole/Stud Size = 1.201 X .551 (H)									
5002007	.244	2.244	~	~	~	~	~	~	~
A = 1.259 Bearing I.D. D = 5.880 Bolt Hole/Stud Size = .500 (H)									
211571X	1.690	1.420	211478-1X	580917	231000	231596	~	~	~

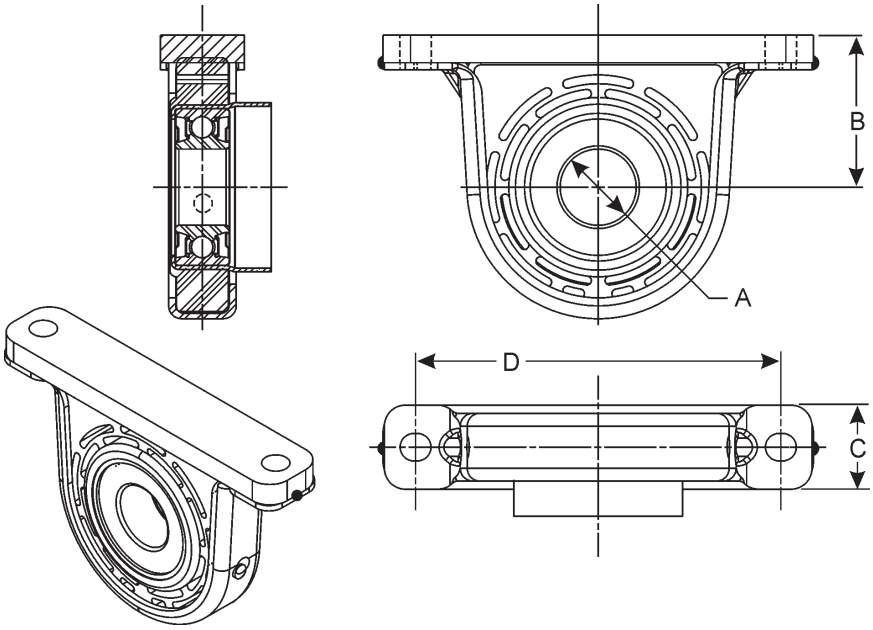

Style 13

Center Bearing Assy Part Number	B Centerline To Mounting Surface	C Bracket Width	Center Bearing Major Parts: Bracket Part Number	Rubber Cushion Part Nbr.	Bearing & Retainer Assy.	Front Slinger Part Number	Rear Slinger Part Number	Retainers: Bottom	Top
Parts not sold separately — Shown for informational purposes only									
A = 1.378 Bearing I.D. D = 6.620 Bolt Hole/Stud Size = .560 (H)									
211985X•	2.750	1.226	231247	232615	580923	~	~	~	~
Has a 1/2" spacer attached to bracket, rubber cushion w/canister									
A = 1.574 Bearing I.D. D = 6.620 Bolt Hole/Stud Size = .560 (H)									
5003684	2.750	1.226	231247	212027X	580924	~	~	~	~
Has a 1/2" spacer attached to bracket, rubber cushion w/canister; less boot can									

• Part is discontinued ■ Part is available until supply is exhausted ⅄ Not sold separately

Important: See Safety Information in General Information Section (J300P-GI)

Center Bearing Detail

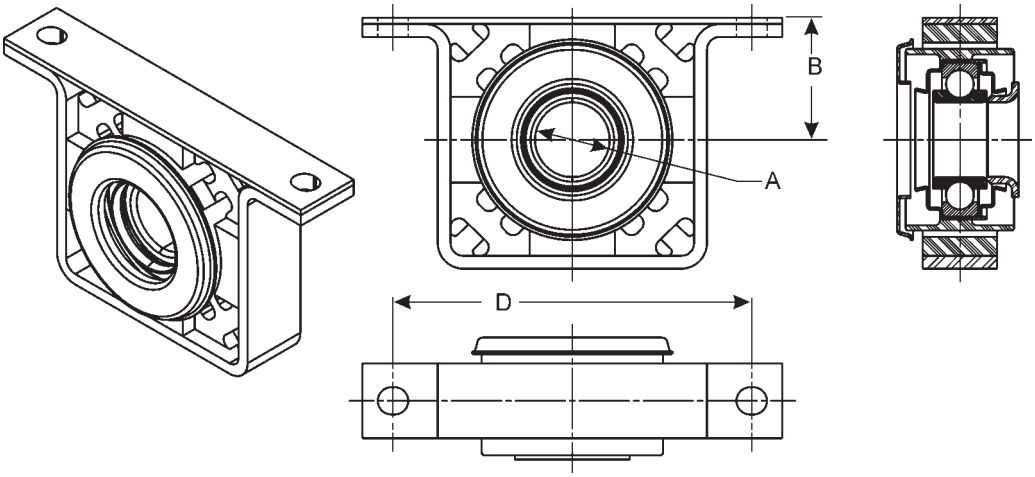

Style 14

Center Bearing Assy Part Number	B Centerline To Mounting Surface	C Bracket Width	Parts not sold separately — Shown for informational purposes only: Center Bearing Major Parts: Bracket Part Number	Rubber Cushion Part Nbr.	Bearing & Retainer Assy.	Front Slinger Part Number	Rear Slinger Part Number	Retainers: Bottom	Top
A = 1.378 Bearing I.D. D = 6.625 Bolt Hole/Stud Size = .560 (H)									
212088-1X•	2.250	~	212087X	231286	231256	~	~	~	~
								Square bracket w/thin plate	
A = 1.375 Bearing I.D. D = 6.625 Bolt Hole/Stud Size = 1.142 X .503 (H)									
5001874	2.250	~	~	~	~	231286	231256	~	~
								Square bracket w/thin plate	

• Part is discontinued ■ Part is available until supply is exhausted ⅄ Not sold separately

Important: See Safety Information in General Information Section (J300P-GI)

Center Bearing Detail

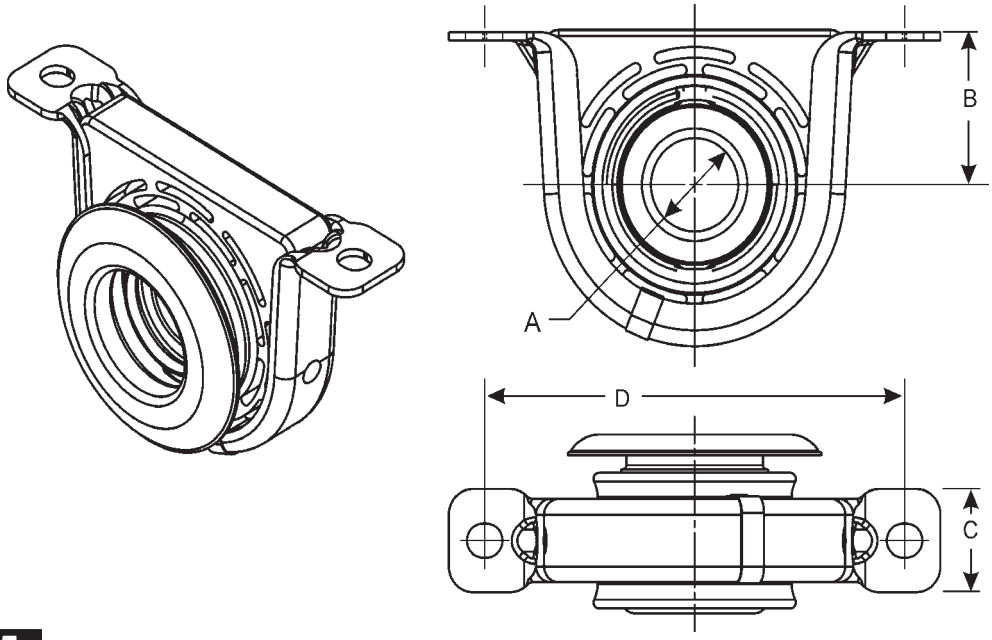

Style 15

Center Bearing Assy Part Number	B Centerline To Mounting Surface	C Bracket Width	Parts not sold separately — Shown for informational purposes only: Center Bearing Major Parts: Bracket Part Number	Rubber Cushion Part Nbr.	Bearing & Retainer Assy.	Front Slinger Part Number	Rear Slinger Part Number	Retainers: Bottom	Top
A = 1.378 Bearing I.D. D = 6.620 Bolt Hole/Stud Size = .560 (H)									
210088-1X	2.250	1.226	231247	230119-1	210086X	230118	230121	3-95-139	~
210090-1X	2.250	1.226	231247	230119-1	210086X	230118	230118	3-95-139	~
211212X	2.250	1.226	231247	230119-1	210086X	~	~	3-95-139	~
210367-1X	2.250	1.226	231247	230119-1	210228X	230982	98-1473	3-95-139	~
210370-1X	2.250	1.226	231247	230119-1	210228X	230982	230104	3-95-139	~ *Has 98-1473 shield*
211415X	2.250	1.226	231247	231709	211414X	231286	230121	3-95-139	~
A = 1.574 Bearing I.D. D = 6.620 Bolt Hole/Stud Size = .560 (H)									
210866-1X	2.250	1.226	231247	230119-1	210865-1X	231004	231000	3-95-139	~
210873-1X	2.250	1.226	231247	230119-1	210865-1X	231004	231004	3-95-139	~
211260X	2.250	1.226	231247	230119-1	210865-1X	~	~	3-95-139	~
211359X	2.250	1.226	231247	231212	210865-1X	231286	231000	3-95-139	~
211735-3X	2.250	1.226	231247	232165	210865-1X	231286	231000	3-95-139	~
211793-1X	2.250	1.226	231247	230119-1	210865-1X	231286	231000	3-95-139	~
5008025	2.250	1.226	231247	231212	210865-1X	~	231000	3-95-139	~

• Part is discontinued ■ Part is available until supply is exhausted ⅄ Not sold separately

Important: See Safety Information in General Information Section (J300P-GI)

Center Bearing Detail

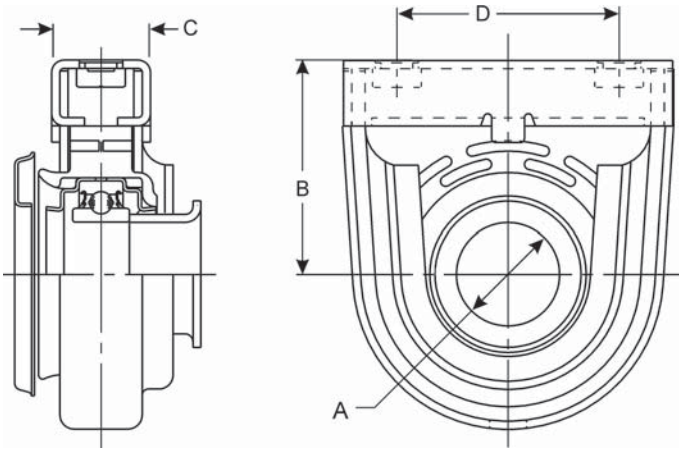

Style 16

Center Bearing Assy Part Number	B Centerline To Mounting Surface	C Bracket Width	Parts not sold separately — Shown for informational purposes only: Center Bearing Major Parts: Bracket Part Number	Rubber Cushion Part Nbr.	Bearing & Retainer Assy.	Front Slinger Part Number	Rear Slinger Part Number	Retainers: Bottom	Top
A = 1.574 Bearing I.D. D = 3.380 Bolt Hole/Stud Size = .437 X 14TH (nut)									
211848-1X	3.250	1.742	232465	231212	210865-1X	231286	232662	~	~
Nuts are incorporated in bracket									
A = 1.574 Bearing I.D. D = 3.380 Bolt Hole/Stud Size = M10 X 1.5TH (nut)									
211963-1X	3.250	1.742	232683	231212	210865-1X	231286	232662	~	~
Nuts are incorporated in bracket									

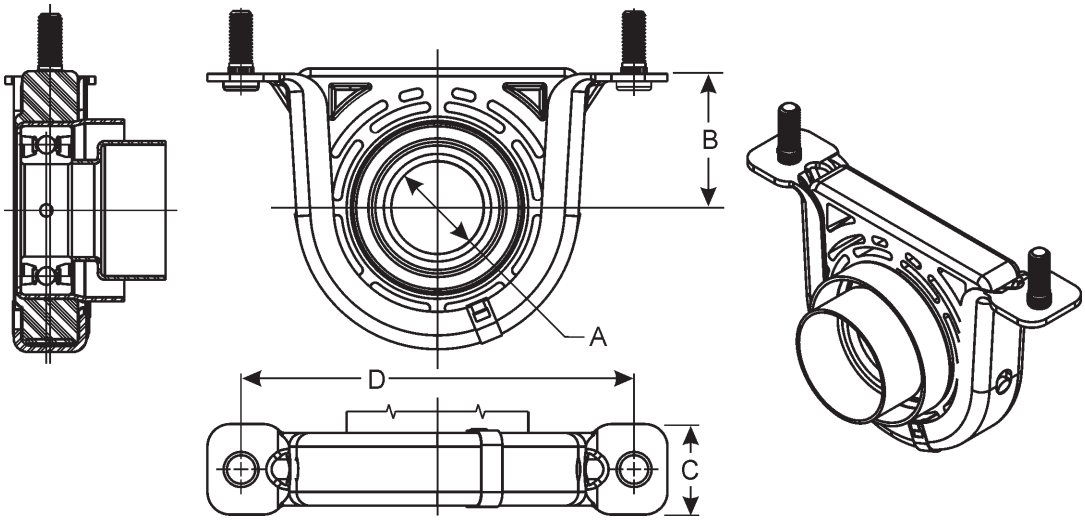

Style 17

Center Bearing Assy Part Number	B Centerline To Mounting Surface	C Bracket Width	Parts not sold separately — Shown for informational purposes only: Center Bearing Major Parts: Bracket Part Number	Rubber Cushion Part Nbr.	Bearing & Retainer Assy.	Front Slinger Part Number	Rear Slinger Part Number	Retainers: Bottom	Top
A = 1.574 Bearing I.D. D = 6.620 Bolt Hole/Stud Size = M10 X 1.5TH (stud)									
212028-1X	2.250	1.226	232820	212027X	580924	~	~	3-95-139	~
rubber cushion w/canister, studs in bracket; 232817 Boot Can									

• Part is discontinued ■ Part is available until supply is exhausted ⅄ Not sold separately

Important: See Safety Information in General Information Section (J300P-GI)

Center Bearing Detail

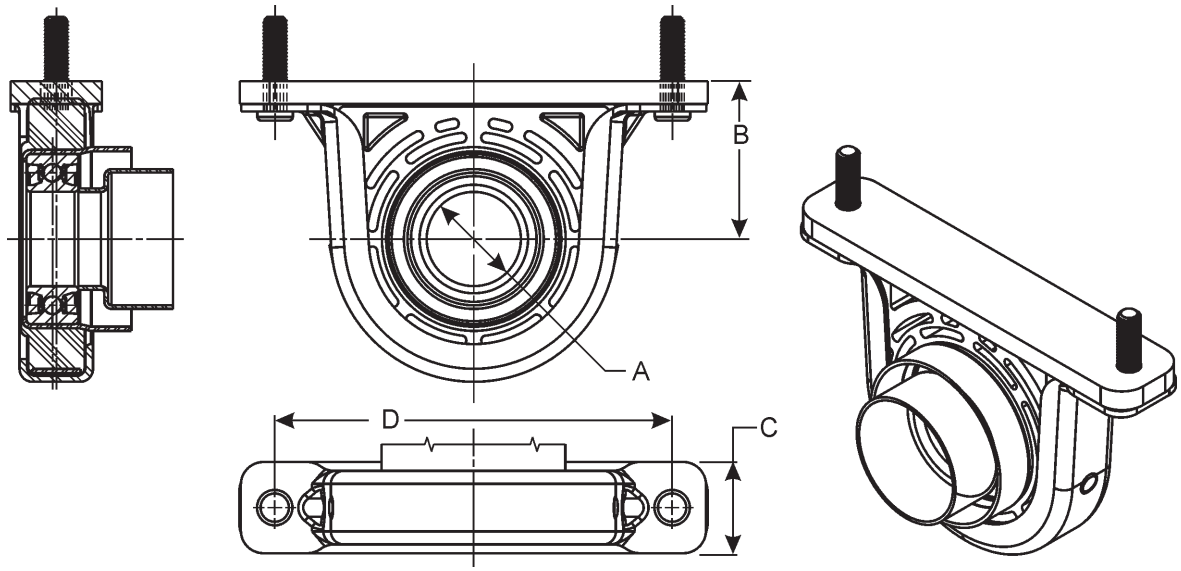

Style 18

Center Bearing Assy Part Number	B Centerline To Mounting Surface	C Bracket Width	Parts not sold separately — Shown for informational purposes only: Center Bearing Major Parts: Bracket Part Number	Rubber Cushion Part Nbr.	Bearing & Retainer Assy.	Front Slinger Part Number	Rear Slinger Part Number	Retainers: Bottom	Top
A = 1.574 Bearing I.D. D = 6.620 Bolt Hole/Stud Size = M10 - 1.50TH (stud)									
212032-1X	2.630	1.226	232820	212027X	580924	~	~	~	~

Has a .380" spacer, rubber cushion w/canister, studs in bracket; 232817 Boot Can

• Part is discontinued ■ Part is available until supply is exhausted ⅄ Not sold separately

Important: See Safety Information in General Information Section (J300P-GI)

Center Bearing Detail

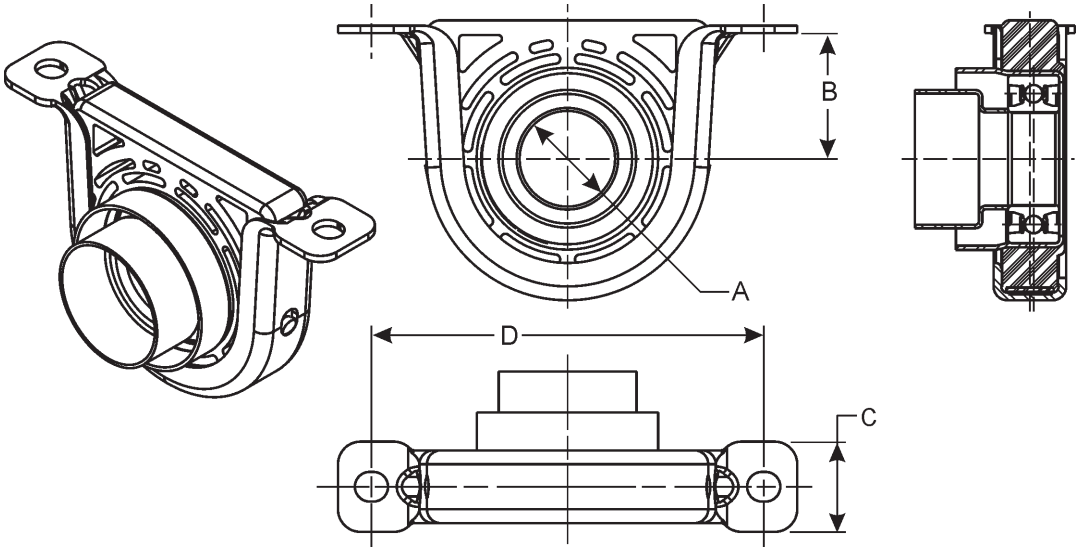

Style 19

Center Bearing Assy Part Number	B Centerline To Mounting Surface	C Bracket Width	Parts not sold separately — Shown for informational purposes only: Center Bearing Major Parts: Bracket Part Number	Rubber Cushion Part Nbr.	Bearing & Retainer Assy.	Front Slinger Part Number	Rear Slinger Part Number	Retainers: Bottom	Top
A = 1.574 Bearing I.D. D = 6.620 Bolt Hole/Stud Size = .560 (H)									
212030-1X	2.250	1.226	231247	212027X	580924	~	~	~	~
rubber cushion w/canister; 232817 boot can									
A = 1.574 Bearing I.D. D = 6.620 Bolt Hole/Stud Size = 1.180 X .430 (H)									
212031X	2.250	1.226	232824	212027X	580924	~	~	~	~
rubber cushion w/canister; less boot can									
212031-1X	2.250	1.226	232824	212027X	580924	~	~	~	~
rubber cushion w/canister; 232817 boot can									
A = 1.574 Bearing I.D. D = 6.700 Bolt Hole/Stud Size = .470 (H)									
212258-1X	2.250	1.226	233052	5001377	580924	~	~	~	~
rubber cushion w/canister; 232817 boot can									
A = 1.771 Bearing I.D. D = 7.622 Bolt Hole/Stud Size = .560 (H)									
212134-1X	2.689	2.250	230148	212133X	580932	~	~	~	~
Less boot can									

• Part is discontinued ■ Part is available until supply is exhausted ⅄ Not sold separately

Important: See Safety Information in General Information Section (J300P-GI)

Center Bearing Detail

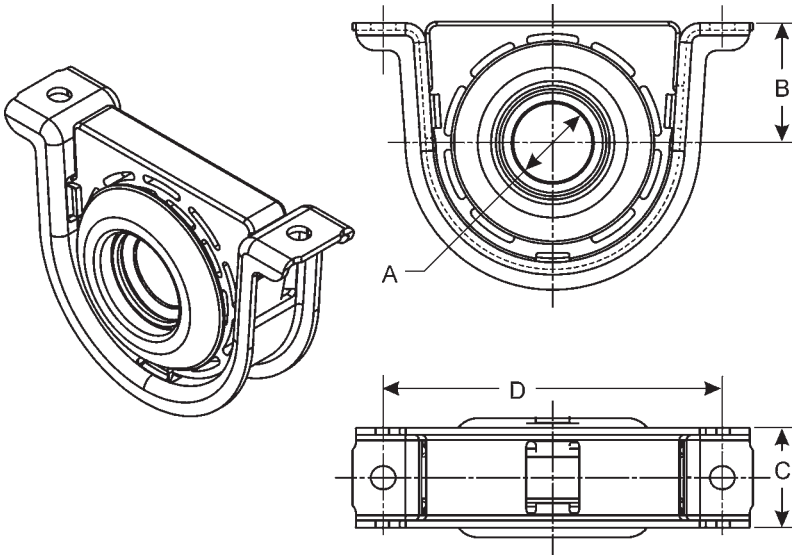

Style 20

Center Bearing Assy Part Number	B Centerline To Mounting Surface	C Bracket Width	Parts not sold separately — Shown for informational purposes only: Center Bearing Major Parts: Bracket Part Number	Rubber Cushion Part Nbr.	Bearing & Retainer Assy.	Front Slinger Part Number	Rear Slinger Part Number	Retainers: Bottom	Top
A = 1.574 Bearing I.D. D = 6.620 Bolt Hole/Stud Size = .560 (H)									
210140-1X	2.440	2.000	230549	230126-1	210119-1X	230207	230208	~	~
210144-1X	2.440	2.000	230549	230126-1	210119-1X	230207	230207	~	~
210391-1X	2.440	2.000	230549	230126-1	210085-1X	230124	230124	~	~
210433-1X	2.440	2.000	230549	230126-1	210085-1X	230124	230209	~	~
211037-1X	2.440	2.000	230549	230126-1	210085-1X	230124	230209	~	~
211098-1X	2.440	2.000	230549	230126-1	210085-1X	~	~	~	~
A = 1.771 Bearing I.D. D = 7.620 Bolt Hole/Stud Size = .560 (H)									
210084-2X	2.690	2.250	230148	230147-3	210092-1X	230151	230151	~	~
210207-1X	2.690	2.250	230148	230147-3	210092-1X	230151	230363	~	~
211172-1X	2.690	2.250	230148	230147-3	210092-1X	230151	230151 230363	~	~
							Can use 210084-2X plus 230363 slinger		
A = 1.968 Bearing I.D. D = 7.620 Bolt Hole/Stud Size = .620 (H)									
210121-1X	2.780	2.250	230164	230167-1	210120-1X	230166	230166	~	~
210881-1X	2.780	2.250	230164	230958-1	210120-1X	230166	230166	~	~
211625-1X	2.780	2.250	230164	230167-1	210120-1X	230166	231994	~	~

• Part is discontinued ■ Part is available until supply is exhausted ⅄ Not sold separately

Important: See Safety Information in General Information Section (J300P-GI)

Center Bearing Detail

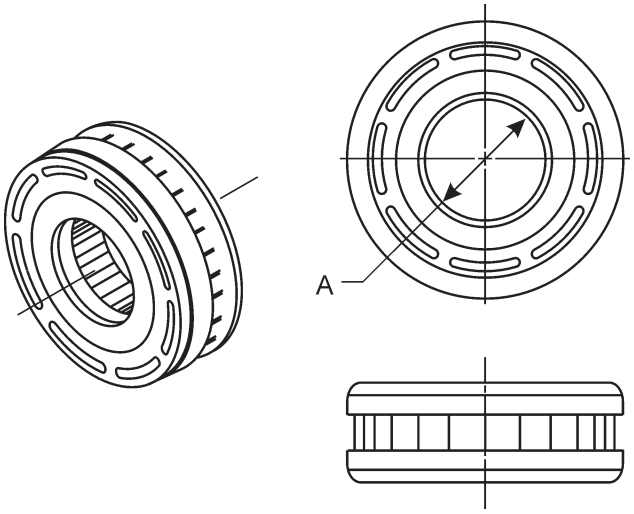

Style 21

Center Bearing Assy Part Number	B Centerline To Mounting Surface	C Bracket Width	Parts not sold separately — Shown for informational purposes only: Center Bearing Major Parts: Bracket Part Number	Rubber Cushion Part Nbr.	Bearing & Retainer Assy.	Front Slinger Part Number	Rear Slinger Part Number	Retainers: Bottom	Top
A = 1.750 Bearing I.D.									
211304X•	~	~	~	~	~	~	~	~	~

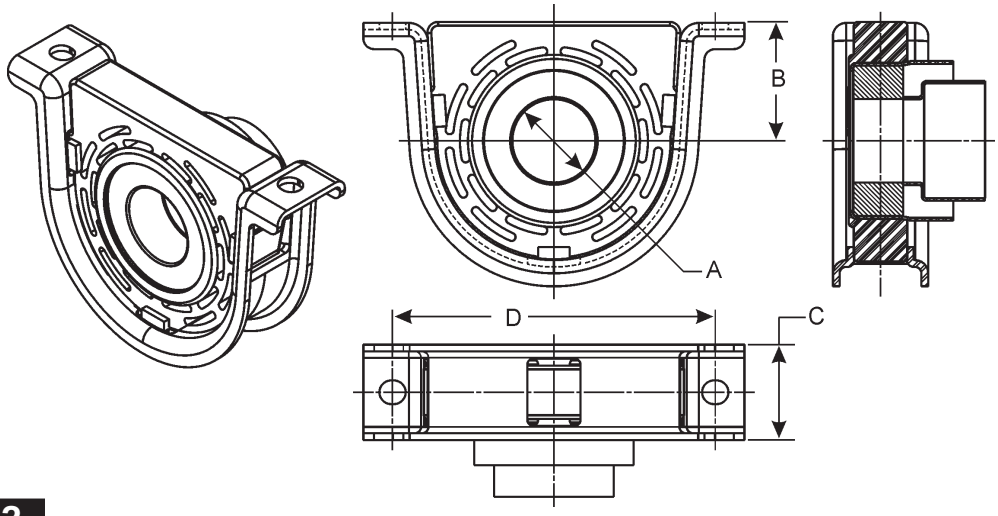

Style 22

Center Bearing Assy Part Number	B Centerline To Mounting Surface	C Bracket Width	Parts not sold separately — Shown for informational purposes only: Center Bearing Major Parts: Bracket Part Number	Rubber Cushion Part Nbr.	Bearing & Retainer Assy.	Front Slinger Part Number	Rear Slinger Part Number	Retainers: Bottom	Top
A = 1.771 Bearing I.D. D = 7.622 Bolt Hole/Stud Size = .559									
212135-1X	2.690	2.250	230148	212133X	580932	~	~	~	~
232930 Boot Can; Rubber cushion with canister									
A = 1.771 Bearing I.D. D = 7.622 Bolt Hole/Stud Size = .620 (H)									
212261-1X	2.690	2.250	233077	212133X	580932	~	~	~	~
less boot can; Rubber cushion with canister									
A = 1.968 Bearing I.D. D = 7.620 Bolt Hole/Stud Size = .620 (H)									
212142-1X	2.780	2.250	230164	212141X	580933	~	~	~	~
232944 Boot Can; Rubber cushion with canister									

• Part is discontinued ■ Part is available until supply is exhausted ⅄ Not sold separately

Important: See Safety Information in General Information Section (J300P-GI)

Center Bearing Detail

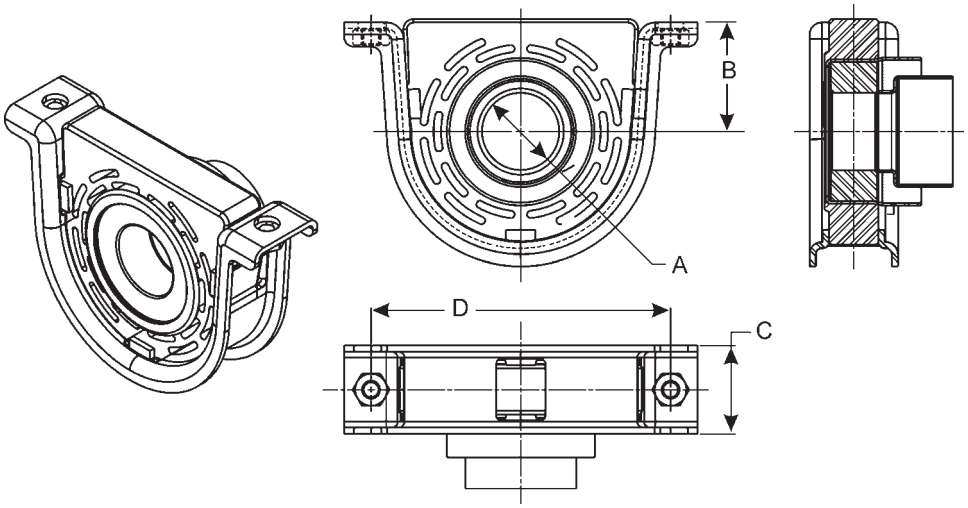

Style 23

Center Bearing Assy Part Number	B Centerline To Mounting Surface	C Bracket Width	Parts not sold separately — Shown for informational purposes only: Center Bearing Major Parts: Bracket Part Number	Rubber Cushion Part Nbr.	Bearing & Retainer Assy.	Front Slinger Part Number	Rear Slinger Part Number	Retainers: Bottom	Top
A = 1.771 Bearing I.D. D = 7.620 Bolt Hole/Stud Size = M12 X 1.75TH (nut)									
212145-1X	2.689	2.250	212222X	212133X	580932	~	~	~	~
232930 Boot Can; Rubber cushion with canister; nuts attached to bracket									
A = 1.968 Bearing I.D. D = 7.620 Bolt Hole/Stud Size = M12 X 1.75TH (nut)									
212153-1X	2.780	2.250	212229X	212141X	580933	~	~	~	~
232944 Boot Can; Rubber cushion with canister; nuts attached to bracket; Part has been discontinued; offered until supply is exhausted									

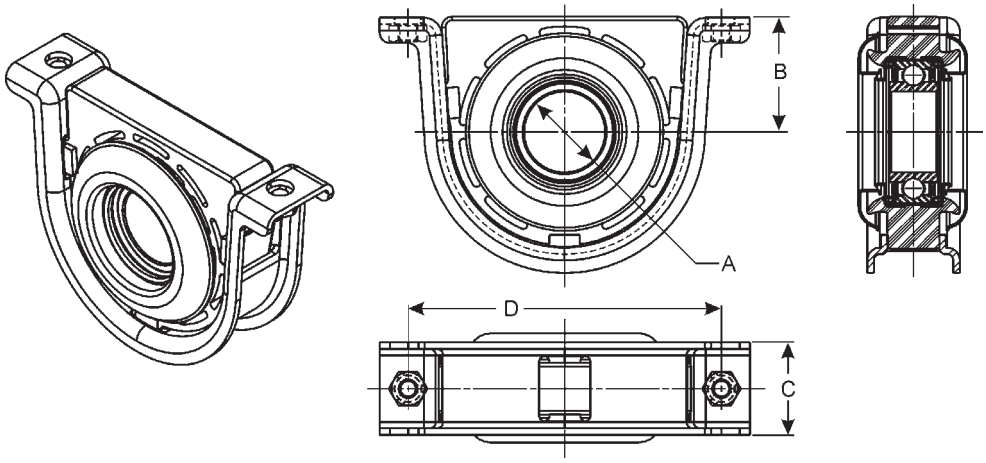

Style 24

Center Bearing Assy Part Number	B Centerline To Mounting Surface	C Bracket Width	Parts not sold separately — Shown for informational purposes only: Center Bearing Major Parts: Bracket Part Number	Rubber Cushion Part Nbr.	Bearing & Retainer Assy.	Front Slinger Part Number	Rear Slinger Part Number	Retainers: Bottom	Top
A = 1.968 Bearing I.D. D = 7.620 Bolt Hole/Stud Size = M12 X 1.75TH (nut)									
212156-1X	2.780	2.250	212229X	230167-1	550788	230166	230166	~	~
212229X consists of 232953 bracket and (2) nuts attached to bracket Part has been discontinued; offered until supply is exhausted									

• Part is discontinued ■ Part is available until supply is exhausted ⅄ Not sold separately

Important: See Safety Information in General Information Section (J300P-GI)

Center Bearing Detail

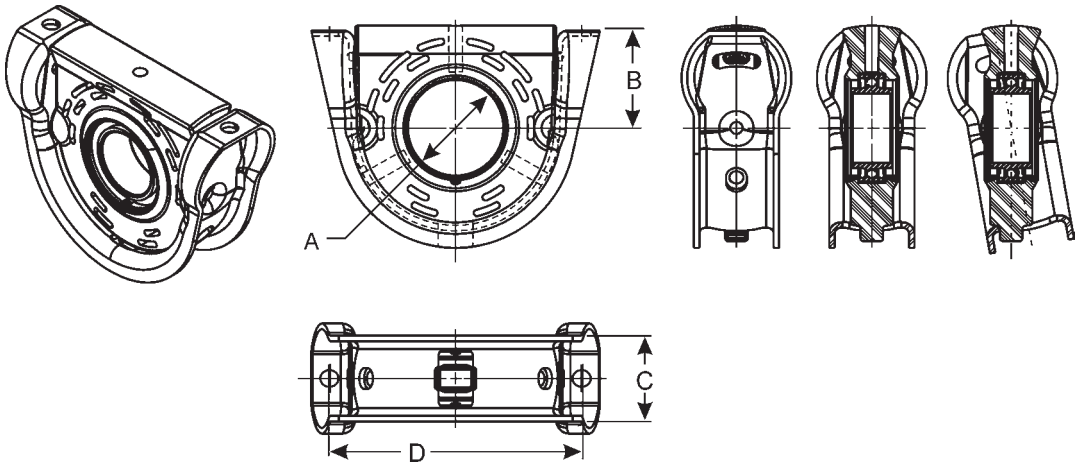

Style 25

Center Bearing Assy Part Number	B Centerline To Mounting Surface	C Bracket Width	Center Bearing Major Parts: Bracket Part Number	Rubber Cushion Part Nbr.	Bearing & Retainer Assy.	Front Slinger Part Number	Rear Slinger Part Number	Retainers: Bottom	Top
			Parts not sold separately — Shown for informational purposes only						
A = 2.362 Bearing I.D.		**D = 8.622**	**Bolt Hole/Stud Size = .618 (H)**						
5003323	3.330	2.917	5003324	5003325	5001950	~	~	~	~
						Replaces 210661-1X, 210987-1X, 212066-1X, 212129-1X			
5003326	3.300	2.917	5003324	5002433	5001950	~	~	~	~
						Solid rubber, replaces 210875-1X, 210989-1X			
5003628	3.300	2.917	5003627	5003325	5001950	~	~	~	~
						Semi slotted rubber, replaces 212155-1X			

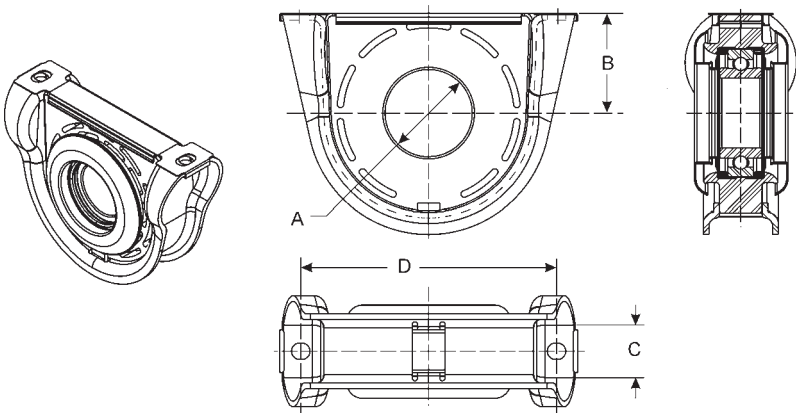

Style 26

Center Bearing Assy Part Number	B Centerline To Mounting Surface	C Bracket Width	Center Bearing Major Parts: Bracket Part Number	Rubber Cushion Part Nbr.	Bearing & Retainer Assy.	Front Slinger Part Number	Rear Slinger Part Number	Retainers: Bottom	Top
			Parts not sold separately — Shown for informational purposes only						
A = 2.362 Bearing I.D.		**D = 8.620**	**Bolt Hole/Stud Size = .560 (H)**						
210661-1X	3.380	2.530	230750	230749-1	210660-1X	230746	230746	~	8-95-49
							Superseded to 5003323 (Style 25)		
210875-1X	3.380	2.530	230750	231008-1	210660-1X	230746	230746	~	8-95-49
							Solid rubber; Superseded to 5003326 (Style 25)		
210989-1X	3.380	2.530	230750	231008-1	210660-1X	~	~	~	8-95-49
							Solid rubber; Superseded to 5003326 (Style 25)		
212066-1X	3.380	2.530	230750	232853	210660-1X	230746	230746	~	8-95-49
							Superseded to 5003323 (Style 25)		

• Part is discontinued ■ Part is available until supply is exhausted ⅄ Not sold separately

Important: See Safety Information in General Information Section (J300P-GI)

Center Bearing Detail

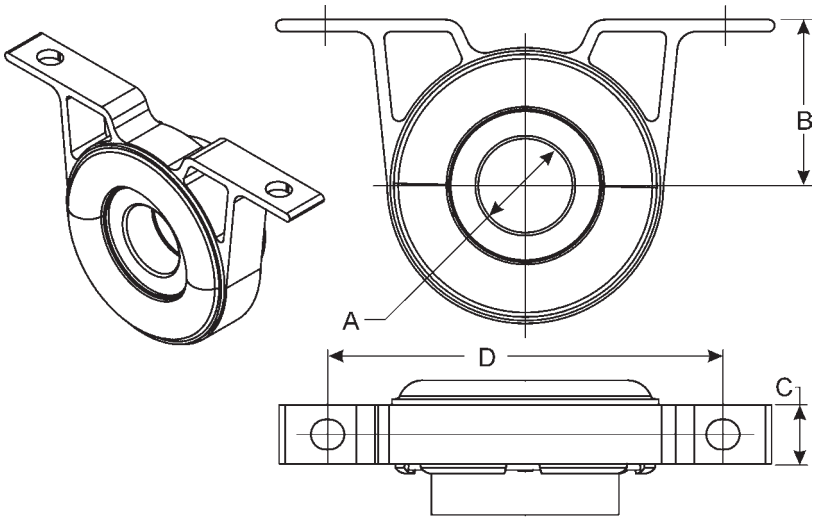

Style 27

Center Bearing Assy Part Number	B Centerline To Mounting Surface	C Bracket Width	Parts not sold separately — Shown for informational purposes only: Center Bearing Major Parts: Bracket Part Number	Rubber Cushion Part Nbr.	Bearing & Retainer Assy.	Front Slinger Part Number	Rear Slinger Part Number	Retainers: Bottom	Top
A = 1.574 Bearing I.D. D = 6.622 Bolt Hole/Stud Size = .559 (H)									
5009792	2.748	.992	5009488	~	580924	~	231000	~	~

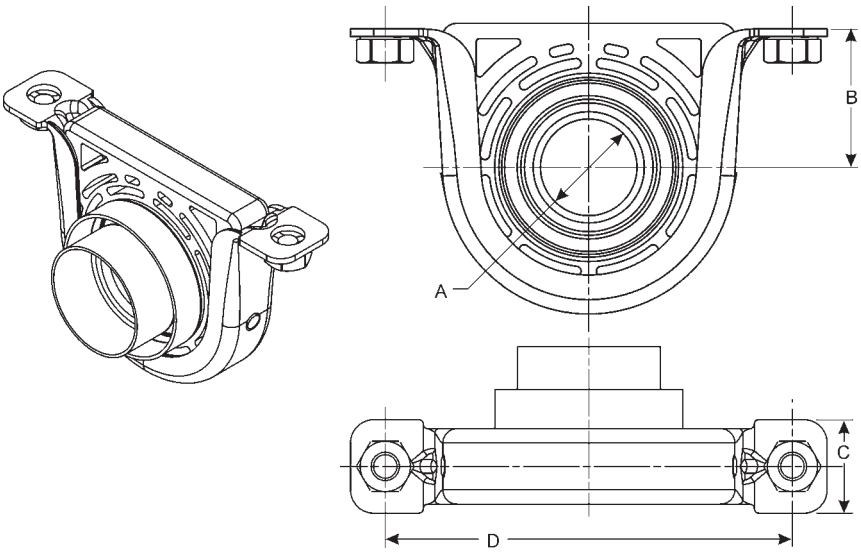

Style 28

Center Bearing Assy Part Number	B Centerline To Mounting Surface	C Bracket Width	Parts not sold separately — Shown for informational purposes only: Center Bearing Major Parts: Bracket Part Number	Rubber Cushion Part Nbr.	Bearing & Retainer Assy.	Front Slinger Part Number	Rear Slinger Part Number	Retainers: Bottom	Top
A = 1.574 Bearing I.D. D = 6.620 Bolt Hole/Stud Size = M12 X 1.75TH (nut)									
212144-1X	2.248	1.520	231221X	212027X	580924	~	~	~	~
232817 boot can; Rubber cushion with canister; nuts attached to bracket;									

• Part is discontinued ■ Part is available until supply is exhausted ⅄ Not sold separately

Important: See Safety Information in General Information Section (J300P-GI)

Part Number Index

210084-2X 16
210088-1X 12
210090-1X 12
210121-1X 16
210140-1X 16
210144-1X 16
210207-1X 16
210330-6X 4
210330-4X 4
210330-2X• 4
210330-1X 4
210367-1X 12
210370-1X 12
210391-1X 16
210433-1X 16
210527X 9
210661-1X 19
210866-1X 12
210873-1X 12
210875-1X 19
210881-1X 16
210989-1X 19
211037-1X 16
211098-1X 16
211172-1X 16
211175X 9
211212X 12
211260X 12
211304X• 17
211359X 12
211406X 5
211415X 12
211431X 9
211499X 9
211502X 6
211514X 5
211571X 10
211589-1X 6
211590-1X 9
211625-1X 16
211735-3X 12
211748-3X• 9
211750-1X 7
211793-1X 12
211819-1X• 9
211848-1X 13
211872-1X 7
211963-1X 13
211985X• 10
212028-1X 13
212030-1X 15
212031-1X 15
212032-1X 14
212031X 15
212053-1X 9
212066-1X 19
212088-1X• 11
212134-1X 15
212135-1X 17
212142-1X 17
212144-1X 20
212145-1X 18
212153-1X 18
212156-1X 18
212165-1X 8
212166-1X• 8
212187-1X 5
212244-1X 8
212258-1X 15
212261-1X 17
5001874 11
5002007 10
5003323 19
5003326 19
5003628 19
5003684 10
5008025 12
5009385 8
5009792 20

Warranty

Dana Holding Corporation warrants that the Spicer® driveshaft product will be free from defects in material and workmanship, conforms to Dana's drawings and specifications, and will be fit for those applications approved in writing by Dana's engineering group. Dana will offer a warranty period of 12 months from date of invoice.

This warranty does not apply to Spicer products or components which have been modified or altered; damaged by the environment, road conditions, collision, fire or other casualty issues; improperly or inadequately installed or maintained ; or subjected to shock loading or driver abuse.

Dana Holding Corporation makes no other representation or warranty with respect to the Spicer products described above, whether expressed or implied, as to merchantability, fitness for any particular purpose or otherwise. Dana's sole obligation hereunder is limited to repair or replacement of any defective Spicer product. Dana will not be liable for any incidental, consequential, special or other damages hereunder, including, but not limited to expenses related to labor, towing, diagnostic costs and loss of use of the vehicle or application.

No warranty claim will be allowed until Dana has had 90 days to examine the allegedly defective products. Required parts must be returned freight prepaid to Dana following Dana shipping instructions. Dana will be the final authority in the event of cause of defect, cannot be mutually agreed upon.

SPICER®
DRIVETRAIN COMPONENTS

NEW!
Spicer® XC™ Center Bearing
Cost Savings with Improved Performance

- **Improved Performance**
  - Maintenance free factory sealed bearing and double-lip seal configuration decreases contamination and extends life.
  - Innovative design allows for angle fluctuations of +/- 10 degrees.
  - Advanced technology elastomer material decreases levels of noise and vibration.
- **Weight Reduction**
  - Approximately 1.3 pounds lighter than previous center bearings.
- **Simplified Installation**
  - Elimination of dust shields due to NEW sealed bearing technology.
  - Eliminates the need for multi-hanger bracket and cross member configurations.
- **Approved for all On- and Off-Highway applications**

NEW NUMBER	CURRENT	NEW RUBBER STYLE
5003323	210661-1X	SEMI SLOTTED
	210987-1X	SEMI SLOTTED
	212066-1X	SEMI SLOTTED
	212129-1X	SEMI SLOTTED
5003326	210875-1X	SOLID
	210888-1X	SOLID
5003628	212155-1X	SEMI SLOTTED

Roadranger®
Dana, Eaton and others providing the best products and services in the industry.

DANA

©Dana Corporation 2006

www.spicerparts.com

Form# J3285-2-HVTSS-OES

Dana Aftermarket Group
PO Box 1000
Maumee, Ohio 43537

Warehouse Distributors: 1.800.621.8084
OE Dealers: 1.877.777.5360

www.SpicerParts.com

SPICER®

DANA

J300P-9A Printed in U.S.A.
Copyright Dana Limited, 2014.
All rights reserved. Dana Limited.